THE INFORMATION CONTAINED IN THIS DOCUMENT IS THE PROPERTY OF DMIPL AND IT SHALL NOT BE USED, REPRODUCED OR DISCLOSED TO OTHERS IN WHOLE OR IN PART WITHOUT THE EXPRESS PERMISSION OF DMIPL

ANY MANUAL ALTERATION WITHOUT AUTHORISED SIGNATURE SHALL AUTOMATICALLY RENDER THIS DRAWING INVALID

DEVIATION ON UNTOLERANCED DIMENSIONS IS:2102

DIMENSION								
OVER	0.5	3	6	30	120	400	1000	2000
UP TO & INCL.	3	6	30	120	400	1000	2000	4000
MACHINE TOLERANCE	±0.1	±0.1	±0.2	±0.3	±0.5	±0.8	±1.2	±2
FABRICATION TOLERANCE	±0.2	±0.3	±0.5	±0.8	±1.2	±2	±3	±4

SURFACE FINISH SYMBOLS

ROUGHNESS SYMBOL	CYL.GRINDING	SUR.GRINDING	MACHINING		ROUGH MACHINING
	CG	SG	M		RM
ROUGHNESS VALUES Ra µm	0.8	0.8	3.2	6.3	25

ISSUE	DESCRIPTION	DATE	Sig
R1	Casing Centre 222 was 221 (Error Corrected)	06.05.06	A.S
R2	Design improved made,class F insulation introduced,DB20 S6 Specification Removed	10.03.09	SSK
R3	Speed control model introduced, Input Power 415 watts was 360 watts, Current 2 A was 1.8 A, Speed 1340 rpm was 1400 rpm	22.11.16	SSK
R4	DB20T4 Model withdrawn.	11.09.20	SSK
R5	10µF was 12µF,Power 365W was 415W,Current 1.90A was 2A	08.12.20	SSK

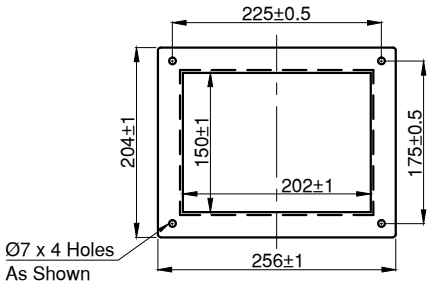

All Dimensions In mm

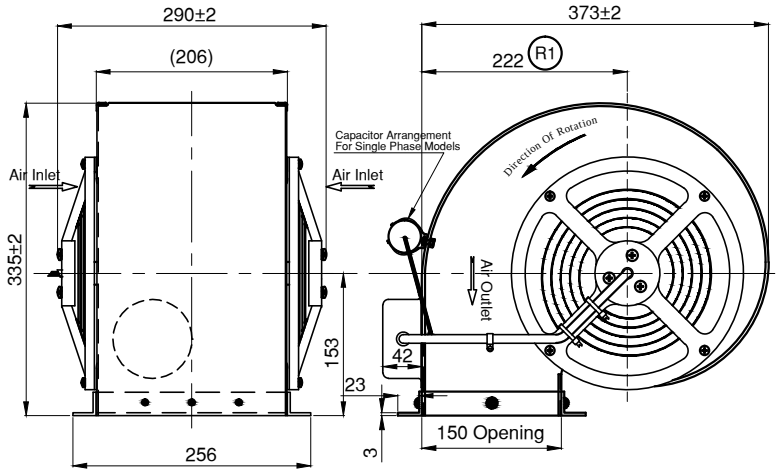

Technical Data

Model	Supply	Full Open Air Output m^3/Hr ±10%	Shut Off Static Pressure mm wc ±10%	Input Power Max. W ±10%	Current A ±10%	Speed RPM ±2%	Inlet Air Temp. Max. °C	Cap. Value uF	Weight Kg	Noise Level db A	Drg. No
DB20T2	415V,3PH 50Hz	2600	85	1750	2.60	2600	60	Not Reqd	18.0	85	DB20-101/1
R3 DB20S4	240V,1PH 50Hz	1400	22	365	1.90	1340	60	10	16.0	70	DB20-101/2 R4
				R5	R5			R5			

Recommended Supply Voltage Control for Single Phase Blowers only:160V to 240V

Air Output Vs Static Pressure

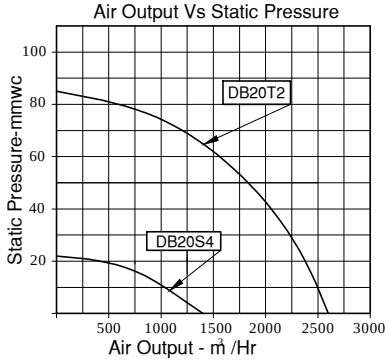

Maximum Vibration Limit: Velocity-2.8 mm/sec RMS(8 mm/sec-Pk-Pk) as per ISO 14694-2003-GradeB V3 Table-4.

List Of Routine Tests Conducted:

1. Measurement Of Winding Resistance of Motor
2. Measurement of parameters like Power, Current, speed, vibration at Rated Supply, With Free inlet
3. High Voltage test for 10 Sec

3a. For 240V: 1.5KV RMS

3b For 415V: 2.0 KV RMS

4.Insulation Resistance with 500V DC Megger
Minimum Insulation Resistance Shall be 5 Meg Ohm

Note:
Air Output And Pressure data are provided for reference only.
Due to continuous development, the above data are subject to change with out prior notice.
Air output - Conversion to cfm: multiply "m³ /hr" by 0.59
Static Pressure - Conversion to pascal : multiply "mmwc" by 9.81

Note : Insulation Shall be Class F

SURFACE PROTECTION DETAILS	
TYPE OF PROCESS	
SPECIFICATION	
COATING AREA	
FINISH	
PATTERN	
DRY FILM THICKNESS	

DIM IN ( ) IS FOR REFERENCE ONLY | DEVATION ON UNTOLERANCED DIMENSION ARE TO BE AS PER IS:2101-MEDIUM CLASS

ALL DIMENSIONS ARE IN MM | FILE NAME : Specification DB20 (STD).dwg | SCALE - NTS | FIRST ANGLE PROJ

DESIGNED BY | CHECKED BY S.S.K | APPROVED BY S.S.K | DATE: | ISSUED DATE

Dynamic Motors (India) Pvt. Ltd.
CHENNAI - 600 058, INDIA
www.dynamicmotorsindia.com
research@dynamicmotorsindia.com
Creating Air Currents

SPECIFICATION DB20 (STD)

DRG NO - DB20-101 | REVISION R5 | SHEET 1 of 1